Engineered Product Reference Guide

BV3B-Series Industrial Brass Ball Valve

The Right Connection®

Sizes
- 1/4" to 3"

Features and Benefits
- Reduced port brass ball
- ISO 5211 mounting pad
- Blow-out proof stem
- Double O-ring stem packing

Specifications
- Pressure rating: **400 PSI** WOG; **100 PSI** WSP
- Maximum temperature: **344°F** (**173°C**)
- Connection: female NPT ends
- Chrome plated brass ball
- FKM elastomers
- PTFE seats with O-ring backing for low operation torque

Size	L-Port Part #	T-Port Part #	Weight (lbs)	Break Torque (in-lbs)	ISO 5211
1/4”	BV3BVLR-0251-A	BV3BVTR-0251-A	1.22	53.1	F03
3/8”	BV3BVLR-0381-A	BV3BVTR-0381-A	1.16	53.1	F03
1/2”	BV3BVLR-0501-A	BV3BVTR-0501-A	1.21	53.1	F03
3/4”	BV3BVLR-0751-A	BV3BVTR-0751-A	1.44	53.1	F03
1”	BV3BVLR-1001-A	BV3BVTR-1001-A	2.64	150.46	F05
1-1/4”	BV3BVLR-1251-A	BV3BVTR-1251-A	4.15	150.46	F05
1-1/2”	BV3BVLR-1501-A	BV3BVTR-1501-A	6.02	150.46	F05
2”	BV3BVLR-2001-A	BV3BVTR-2001-A	9.08	274.37	F07
2-1/2”	BV3BVLR-2501-A	BV3BVTR-2501-A	16.33	380.58	F07
3”	BV3BVLR-3001-A	BV3BVTR-3001-A	19.55	380.58	F07

Dimensions

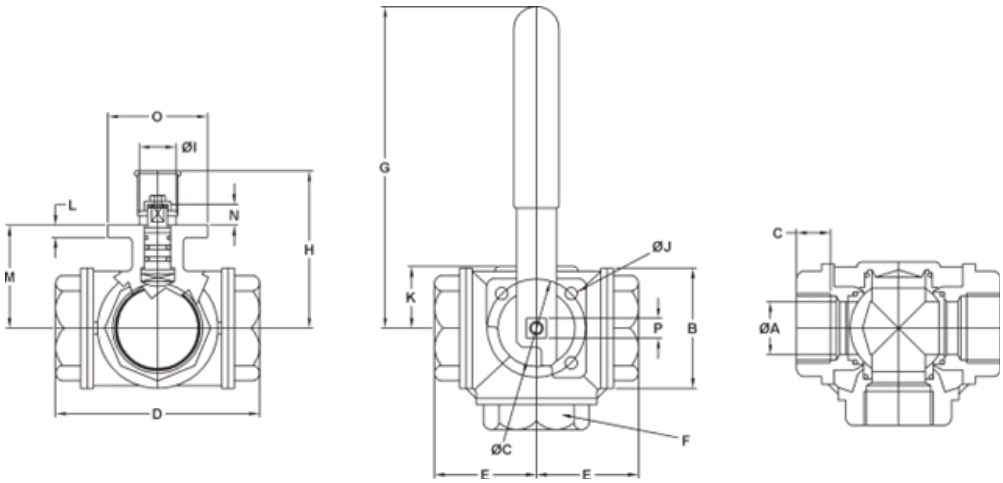

Size	A (in)[1]	B (in)[1]	C (in)	D (in)	E (in)	F (in)	G (in)	H (in)	I (in)	J (in)	K (in)	L (in)	M (in)	N (in)	O (in)	P (mm)
1/4”	.39	1.34	.39	2.64	1.32	.86	4.72	2.44	.87	.23	.77	.20	1.20	.35	1.49	9
3/8”	.43	1.34	.40	2.64	1.32	.86	4.72	2.44	.87	.23	.77	.20	1.20	.35	1.49	9
1/2”	.43	1.34	.53	2.87	1.44	1.06	4.72	2.44	.87	.23	.77	.20	1.20	.35	1.49	9
3/4”	.59	1.53	.55	3.19	1.60	1.25	4.72	2.52	.87	.23	.87	.20	1.29	.35	1.49	9
1”	.79	1.89	.66	3.74	1.87	1.61	6.69	2.95	.94	.27	1.00	.28	1.63	.43	1.97	11
1-1/4”	.98	2.36	.68	4.39	2.20	1.96	6.69	3.17	.94	.27	1.22	.28	1.85	.43	1.97	11
1-1/2”	1.26	2.83	.68	4.86	2.43	2.16	6.69	3.66	1.26	.27	1.79	.28	2.34	.43	1.97	11
2”	1.57	3.38	.70	5.73	2.87	2.75	9.05	4.43	1.46	.35	1.75	.32	2.90	.59	2.75	14
2-1/2”	1.95	4.37	.93	6.93	3.47	3.34	9.05	4.86	1.46	.35	2.20	.32	3.35	.59	2.75	14
3”	1.95	4.45	1.01	7.08	3.54	4.13	9.05	4.86	1.46	.35	2.20	.32	3.35	.59	2.75	14

[1]Clamp and weld dimensions are the same.

BV3B-Series Industrial Brass Ball Valve

Flow Path Codes

The Right Connection®

3-Way | L-Port

3-way 'L'-port Position A	3-way 'L'-port Position B	3-way 'L'-port Position C

Number	Rotation	Flow Path Options
1	90°	A, B
2	180°	A, B, C

3-Way | T-Port

3-way 'T'-port Position A	3-way 'T'-port Position B	3-way 'T'-port Position C	3-way 'T'-port Position D

Number	Rotation	Flow Path Options	Number	Rotation	Flow Path Options
1	90°	A, B	5	180°	A, B, C
2	90°	B, C	6	180°	B, C, D
3	90°	C, D	7	180°	A, C, D
4	90°	A, D	8	180°	A, B, D

Pressure Temperature Chart

0.25 in - 3.00 in

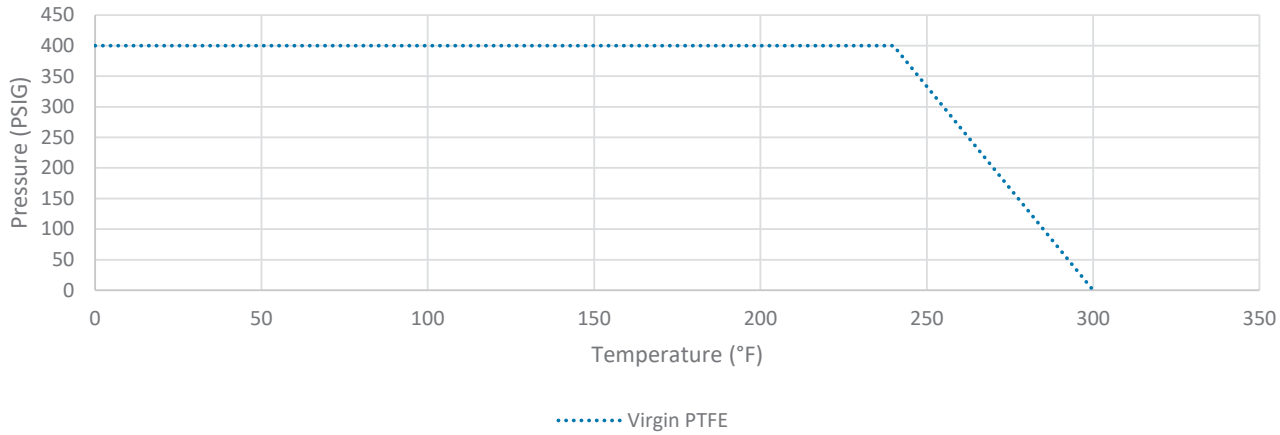

BV3B-Series Industrial Brass Ball Valve

Bill of Materials

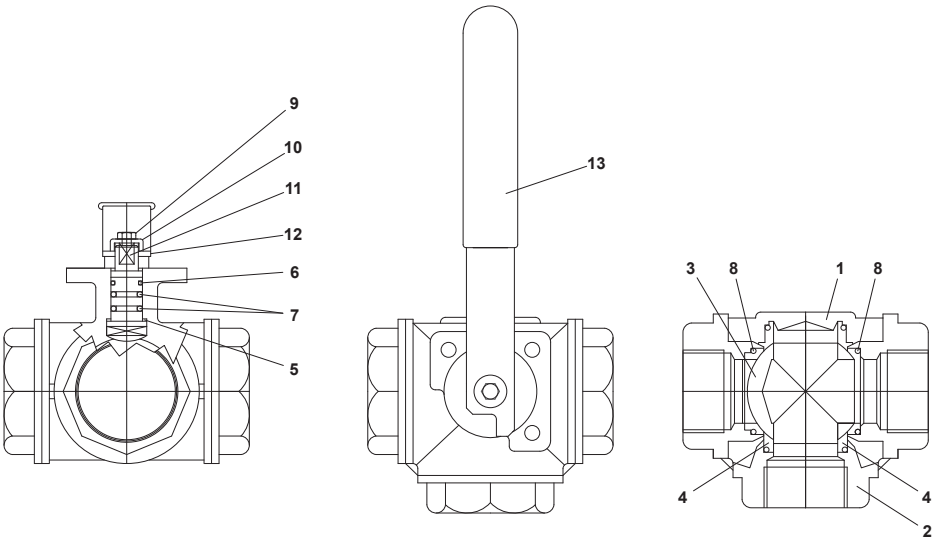

Item	Description	Material	Qty
1	body	brass	1
2	end connection	brass	3
3	ball	chrome plated brass	1
4	ball seat	PTFE	4
5	thrust washer	PTFE	1
6	stem seal	PTFE	1
7	O-ring stem	FKM	1
8	O-ring body	FKM	4
9	screw	steel	1
10	bushing	brass	1
11	stem	brass	1
12	washer	nylon	1
13	handle	steel and vinyl	1

Dixon Sanitary
N25 W23040 Paul Road, Pewaukee, WI 53072
ph: 800.789.1718
dixonvalve.com

© 2024 DVCC • DSEPRG2024_BV3B_0724_Rev1